ORDER NO. APD-8306-637

Service Manual

AUTO PRODUCTS

CX-E300EN

GRAPHIC EQUALIZER

SPECIFICATIONS*

Type:	Dual graphic equalizer
Power source:	DC 12V (test voltage: 14.4V), negative ground
Current drain:	0.23 A
Input sensitivity:	600 mV
Output voltage:	600 mV
Higher harmonics distortion:	0.07%
S/N ratio:	80 dB
Frequency response:	20 ~ 30,000 Hz
Stereo separation:	70 dB (1,000 Hz)
Tone quality adjustment:	50 Hz±12 dB
	250 Hz±12 dB
	1.8 kHz±12 dB
	4 kHz±12 dB
	10 kHz±12 dB
Input impedance:	47 kΩ
Dimensions**:	178(W) x 130(D) x 25(H) mm
Weight**:	0.7 kg

FEATURES

- Stereo graphic equalizer with 5-position tone controls.
- DC 12 V, negative ground.
- Equalizer shift switch.
- Fader control.
- Equalizer switch with LED indicator.
- DIN cords connection.

* Specifications subject to change without notice.
** Weight and dimensions shown are approximate.

Panasonic

Matsushita Electric Trading Co., Ltd.

CONTENTS

	Page
DIMENSIONS	1
OPERATION OF CONTROLS	1
COMPONENT COMBINATION	1
LOCATION OF CONTROLS	2
INSTALLATION INSTRUCTIONS	2
EXPLODED VIEW	3
SCHEMATIC DIAGRAM	4
WIRING DIAGRAM	5
REPLACEMENT PARTS LIST	6 to 11

DIMENSIONS

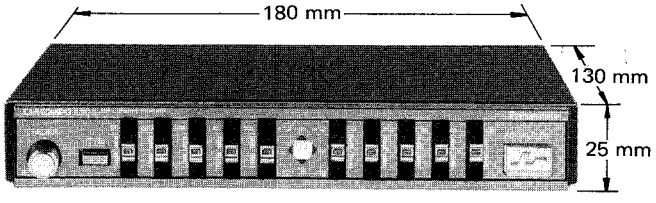

OPERATION OF CONTROLS

Tone Control

This control is used to adjust the frequencies.

- When playing in a car, the sound of frequencies in the vicinity of 50 Hz is normally attenuated. Adjust the control to suit your listening preference.
- When playing in a car, there is a peak at about 250 Hz in the frequency response. Adjust the control to suit your listening preference.
- Use this control to adjust the tone quality according to the type of music being played.

Equalizer Shift Switch (L/R)

When adjusting the volume levels of the front and rear speakers, set this switch to ON and the left and right speakers to OFF.

- Press the equalizer shift switch. The left and right shift indicators will light. Adjust the L side with the left equalizer knob (5 elements) and the R side with the right equalizer knob (5 elements).
- When the equalizer shift switch is not pressed, the upper and lower shift indicators will light. Adjust the front side with the left equalizer knob (5 elements), and the rear side with the rear equalizer knob (5 elements).

In 1-amplifier 2-speaker system, the front side cannot be adjusted.

Fader Control

This control is used to adjust the volume levels of the front and rear speakers in 4-speaker system.

- A left turn of the control increases the volume of the front speakers, and a right turn, the rear speakers.
- In 1-amplifier 2-speaker systemn this control cannot be used for the speakers installed on the front side.

COMPONENT COMBINATION

EX. 1

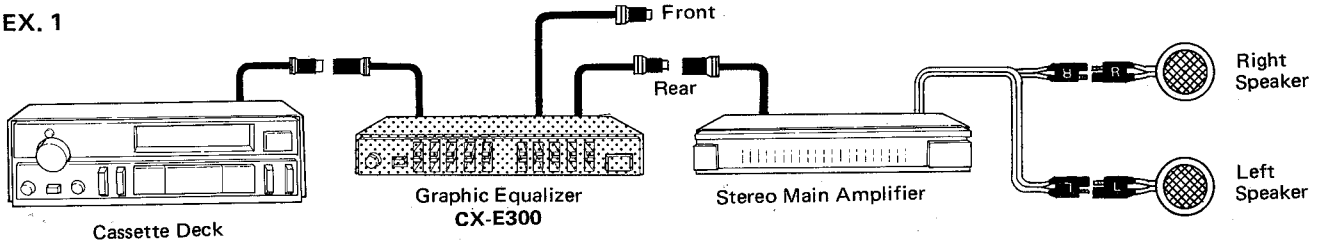

EX. 2

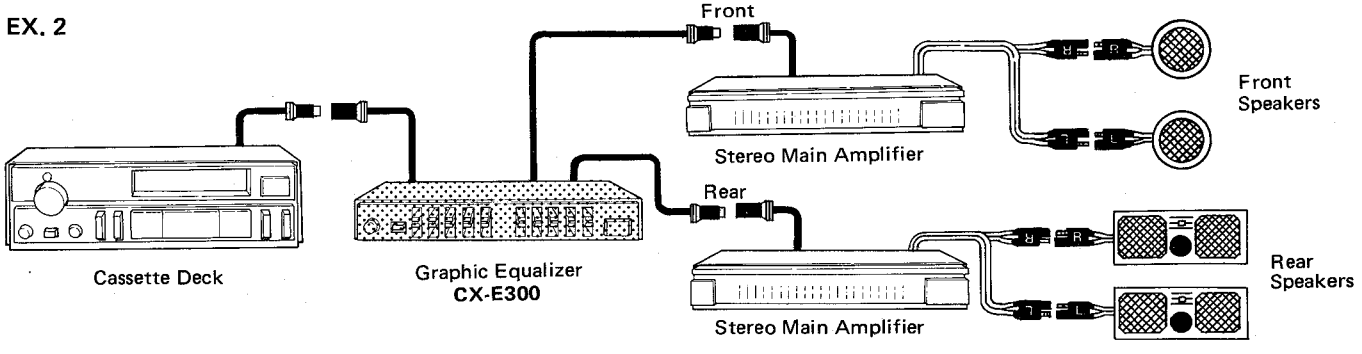

LOCATION OF CONTROLS

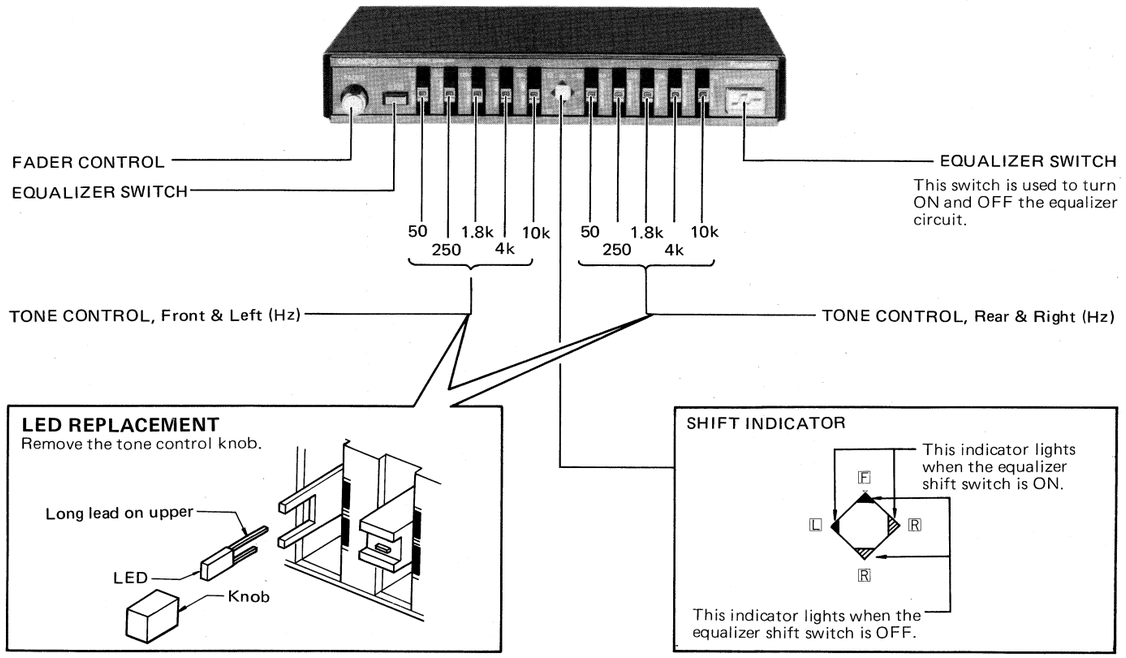

INSTALLATION INSTRUCTIONS

1. Drill two holes (ϕ 6.5-7mm) for the mounting brackets in the dashboard (metal) and one hole (ϕ 6.5-7mm) for the supporting strap in the car body.
2. Secure the supporting strap to the car body.
3. Secure the mouting bracket to the dashboard.
4. Fasten the unit to the mounting bracket
5. Fasten the unit to the supporint strap.

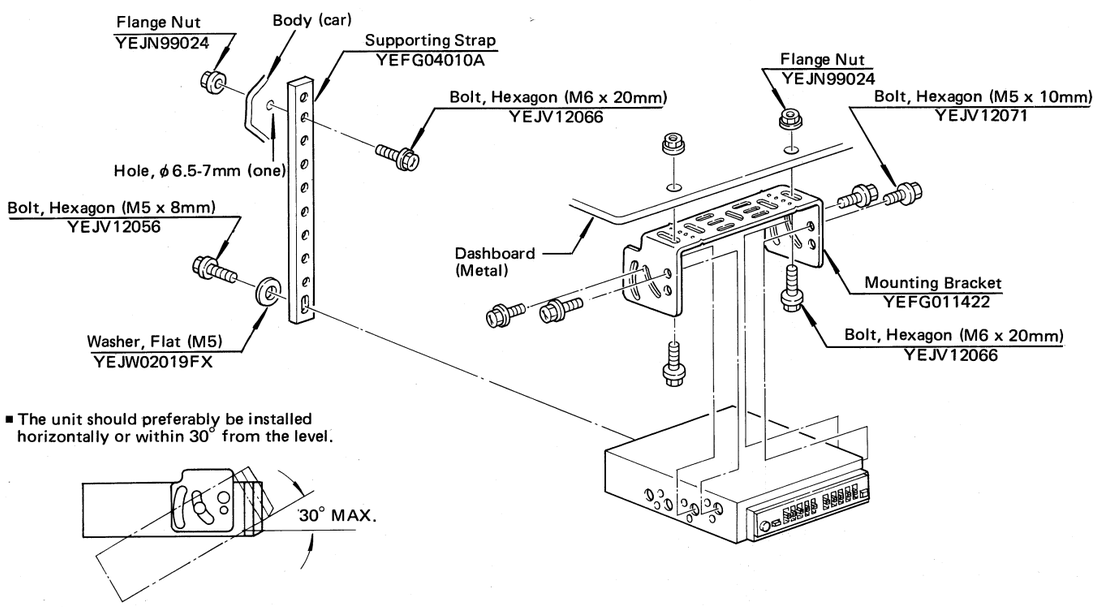

EXPLODED VIEW

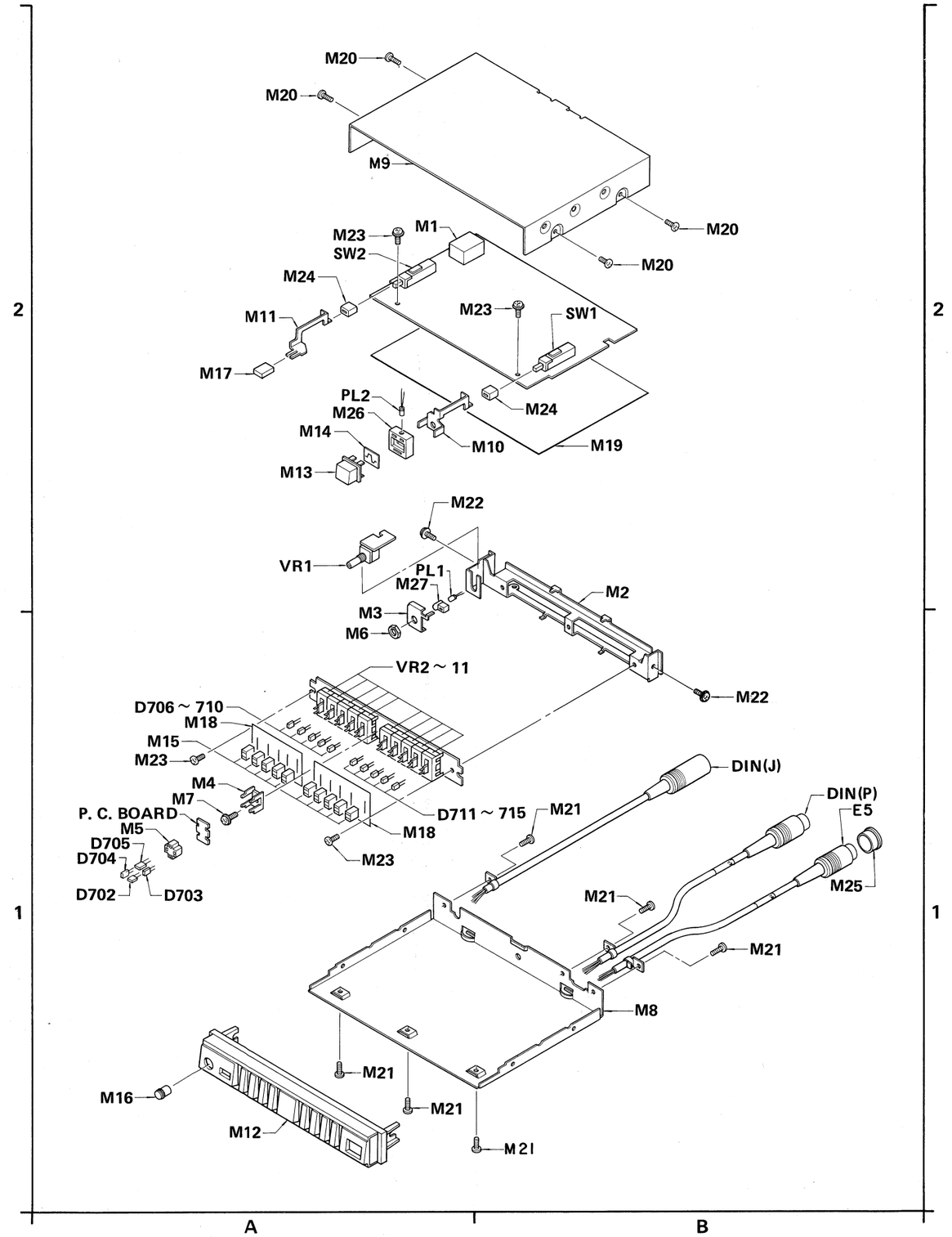

SCHEMATIC DIAGRAM MODEL CX-E300EN

OPERATION AMP
IC 201, 301 AN6552
VOLTAGE STABILIZER
Q 700 2SC1383
FREQUENCY CONTROL
Q 200~214, 300~314 2SC1684H

NOTES:
1) Voltage measurements are with respect to ground, with a digital voltmeter, with controls set for normal operation, no signal applied, 14.4 V DC, power supply.
- Exact value determined by production process. This schematic diagram is the latest at the time of printing and subject to change without notice. Replace same value as original parts.
- Important safety notice: Components identified by ⚠ mark have special characteristics important for safety. When replacing any of these components, use only manufacturer's specified parts.

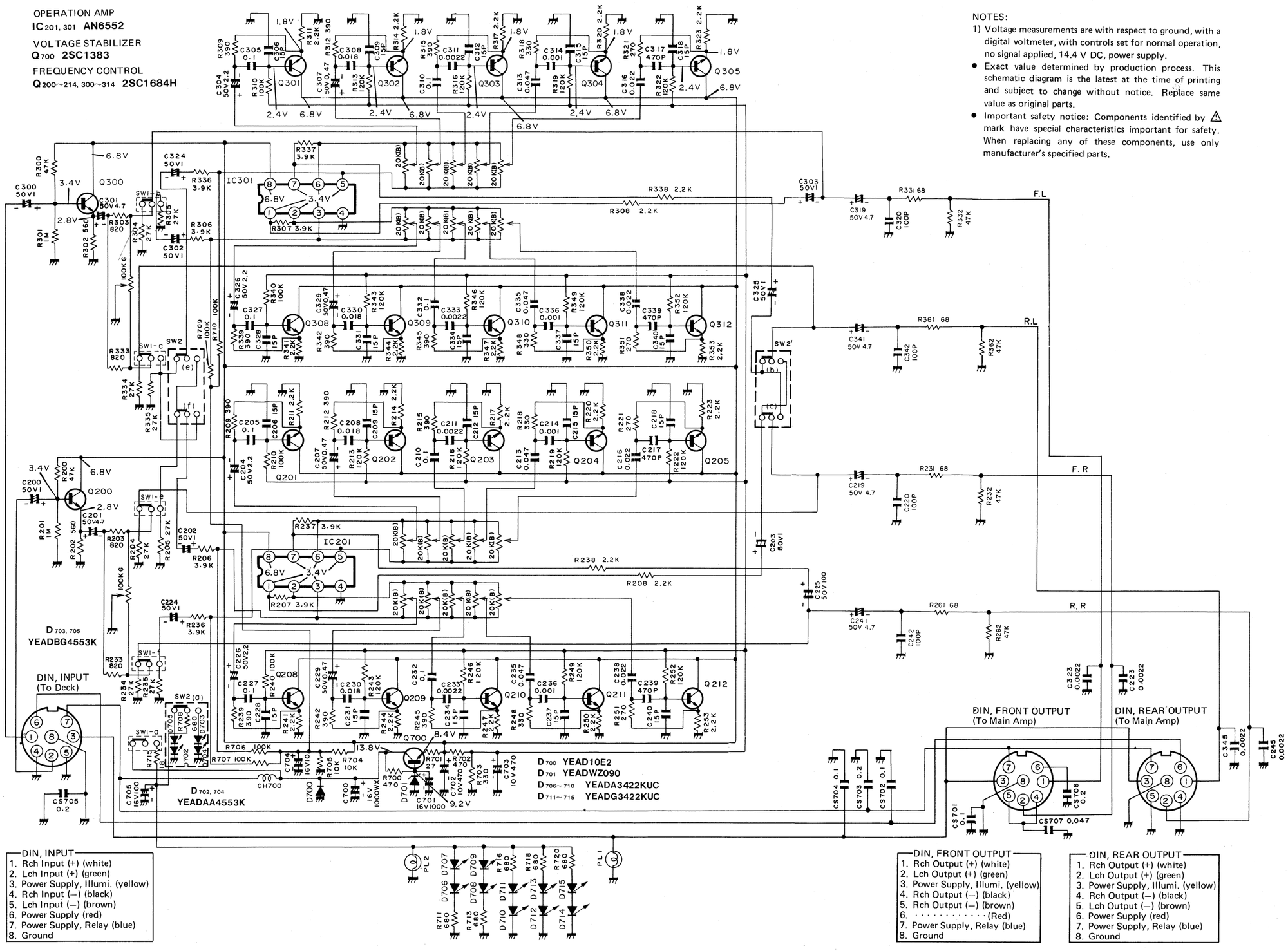

DIN, INPUT
1. Rch Input (+) (white)
2. Lch Input (+) (green)
3. Power Supply, Illumi. (yellow)
4. Rch Input (–) (black)
5. Lch Input (–) (brown)
6. Power Supply (red)
7. Power Supply, Relay (blue)
8. Ground

DIN, FRONT OUTPUT
1. Rch Output (+) (white)
2. Lch Output (+) (green)
3. Power Supply, Illumi. (yellow)
4. Rch Output (–) (black)
5. Rch Output (–) (brown)
6. · · · · · · · · · · · · (Red)
7. Power Supply, Relay (blue)
8. Ground

DIN, REAR OUTPUT
1. Rch Output (+) (white)
2. Lch Output (+) (green)
3. Power Supply, Illumi. (yellow)
4. Rch Output (–) (black)
5. Lch Output (–) (brown)
6. Power Supply (red)
7. Power Supply, Relay (blue)
8. Ground

WIRING DIAGRAM MODEL CX-E300EN

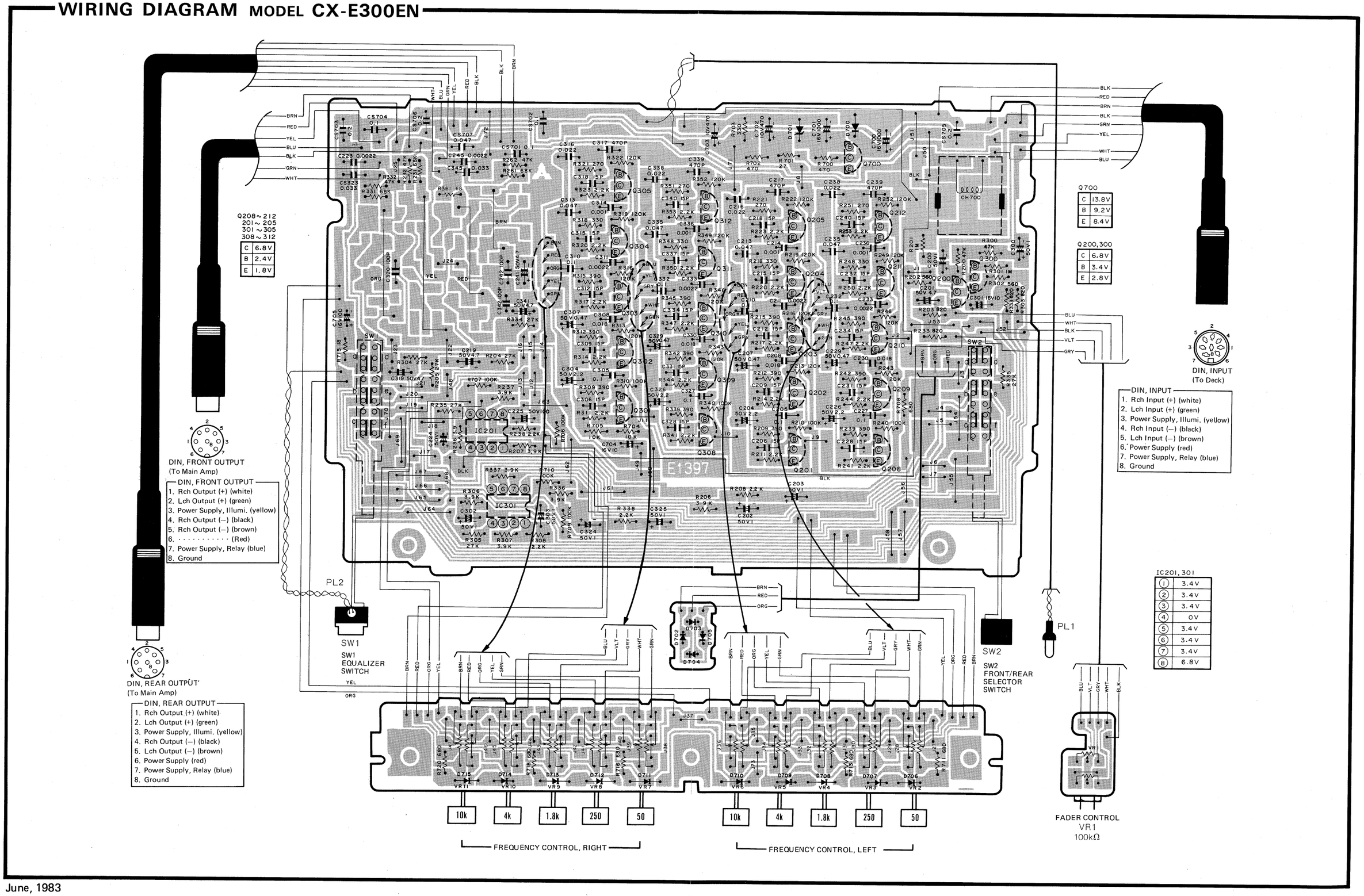

June, 1983

Replacement Parts List
Model NO. CX-E300EN

NOTES:

1. Be sure to make your orders of replacement parts according to this list.
2. Important safety notice: Components identified by ⚠ mark have special characteristics important for safety. When replacing any of these components, use only manufacturer's specified parts.
3. Next to the Ref. No. in the parts list is a location key, to show the general location of the parts shown in the exploded drawing, as in a road map.

MODEL CX-E300EN

Ref. No.	Part No.	Part Name & Description	Pcs Set	Remarks
MISCELLANEOUS				
PL2 (2-A)	YEAL31515WL	Pilot Lamp	1	
PL1 (2-A)	YEAL32020WL	Pilot Lamp	1	
DIN(P) (1-B)	YEAE01355	DIN Connector, Output	2	
DIN(J) (1-B)	YEAE01393	DIN Connector, Input	1	
M1 (2-A)	YEFA13100	Case	1	
M2 (2-B)	YEFA07105	Front Plate	1	
M3 (2-A)	YEFX0211425	Mounting Bracket	1	
M4 (1-A)	YEFK06132	Holder	1	
M5 (1-A)	YEFK06133A	Holder	1	
M6 (1-A)	YEJN01057	Nut, Hexagon	1	
M7 (1-A)	YEJT03009	⊕ Screw, Cuptite	1	
M8 (1-B)	YEFA01646A	Chassis	1	
M9 (2-A)	YEFA03594	Upper Cover	1	
M10 (2-B)	YEFX046619	Lever	1	
M11 (2-A)	YEFX046620	Lever	1	
M12 (1-A)	YEFC021630	Escutcheon Ass'y	1	
M13 (2-A)	YEFE13432	Button, Equalizer	1	
M14 (2-A)	YEFX017224	Indicator	1	
M15 (1-A)	YEFE03023	Knob, Frequency Control	10	
M16 (1-A)	YEFE02094	Knob, Fader	1	
M17 (2-A)	YEFE17225	Knob, Front/Rear Selector	1	
M18 (1-A)	YEFV02319	Shade	2	
M19 (2-B)	YEFV01565	Insulator	1	
M20	XTB3+5FFZS	⊕ Screw, Taptite 3mmø x 5mm	4	
M21	XTB3+5FFXS	⊕ Screw, Taptite 3mmø x 5mm	6	
M22 (2-A) (1-B)	YEJT03015	⊕ Screw, Cuptite 3mmø x 6mm	2	
M23	YEJT03007	⊕ Screw, Cuptite	4	
M24 (2-A) (2-B)	YEFX009109	Joint	2	
M25 (1-B)	YEFR04185	DIN Cap	1	
M26 (2-A)	YEFK04369A	Pilot Lamp Holder	1	
M27 (2-A))	YEFK04379	Pilot Lamp Holder	1	
M28	YEAJ07478	Extension Cord	2	
M29	YEAJ07479	Extension Cord	3	
M30	YEAJ07480	Extension Cord	2	
M31	YEAJ07481	Extension Cord	1	

MODEL CX-E300EN

Ref. No.	Part No.	Part Name & Description	Pcs Set	Remarks
ICs AND TRANSISTORS				
IC201, 301	AN6552	Operation Amp	2	
Q200, 201, 202	2SC1684H	Frequency Control	22	
203, 204, 205				
208, 209, 210				
211, 212, 300				
301, 302, 303				
304, 305, 308				
309, 310, 311				
312				
Q700	2SC1383	Voltage Stabilizer	1	
DIODES				
D700	YEAD10E2	IC Protection	1	
D701	YEADWZ090	Voltage Stabilizer	1	
D702, 704	YEADAA4553K	LED, Speaker Position (Orange)	2	
D703, 705	YEADBG4553K	LED, Speaker Position (Green)	2	
D706, 707, 708	YEADA3422KUC	LED, Frequency Control-Left (Orange)	5	
709, 710				
D711, 712, 713	YEADG3422KUC	LED, Frequency Control-Right (Green)	5	
714, 715				

MODEL CX-E300EN

Ref. No.	Part No.	Part Name & Description	Pcs Set	Remarks
RESISTORS				
R200	ERDS2TJ473	47k OHM 1/4W ±5% Carbon	1	
R201	ERDS2TJ105	1M OHM 1/4W ±5% Carbon	1	
R202	ERDS2TJ561	560 OHM 1/4W ±5% Carbon	1	
R203	ERDS2TJ821	820 OHM 1/4W ±5% Carbon	1	
R204	ERDS2TJ273	27k OHM 1/4W ±5% Carbon	1	
R205	ERDS2TJ273	27k OHM 1/4W ±5% Carbon	1	
R206	ERDS2TJ392	3.9k OHM 1/4W ±5% Carbon	1	
R207	ERDS2TJ392	3.9k OHM 1/4W ±5% Carbon	1	
R208	ERDS2TJ222	2.2k OHM 1/4W ±5% Carbon	1	
R209	ERDS2TJ391	390 OHM 1/4W ±5% Carbon	1	
R210	ERDS2TJ104	100k OHM 1/4W ±5% Carbon	1	
R211	ERDS2TJ222	2.2k OHM 1/4W ±5% Carbon	1	
R212	ERDS2TJ391	390 OHM 1/4W ±5% Carbon	1	
R213	ERDS2TJ124	120k OHM 1/4W ±5% Carbon	1	
R214	ERDS2TJ222	2.2k OHM 1/4W ±5% Carbon	1	
R215	ERDS2TJ391	390 OHM 1/4W ±5% Carbon	1	
R216	ERDS2TJ124	120k OHM 1/4W ±5% Carbon	1	
R217	ERDS2TJ222	2.2k OHM 1/4W ±5% Carbon	1	
R218	ERDS2TJ331	330 OHM 1/4W ±5% Carbon	1	
R219	ERDS2TJ124	120k OHM 1/4W ±5% Carbon	1	
R220	ERDS2TJ222	2.2k OHM 1/4W ±5% Carbon	1	
R221	ERDS2TJ271	270 OHM 1/4W ±5% Carbon	1	
R222	ERDS2TJ124	120k OHM 1/4W ±5% Carbon	1	
R223	ERDS2TJ222	2.2k OHM 1/4W ±5% Carbon	1	
R231	ERDS2TJ680	68 OHM 1/4W ±5% Carbon	1	
R232	ERDS2TJ473	47k OHM 1/4W ±5% Carbon	1	
R233	ERDS2TJ821	820 OHM 1/4W ±5% Carbon	1	
R234	ERDS2TJ273	27k OHM 1/4W ±5% Carbon	1	
R235	ERDS2TJ273	27k OHM 1/4W ±5% Carbon	1	
R236	ERDS2TJ392	3.9k OHM 1/4W ±5% Carbon	1	
R237	ERDS2TJ392	3.9k OHM 1/4W ±5% Carbon	1	
R238	ERDS2TJ222	2.2k OHM 1/4W ±5% Carbon	1	

Ref. No.	Part No.	Part Name & Description	Pcs Set	Remarks
R239	ERDS2TJ391	390 OHM 1/4W ±5% Carbon	1	
R240	ERDS2TJ104	100k OHM 1/4W ±5% Carbon	1	
R241	ERDS2TJ222	2.2k OHM 1/4W ±5% Carbon	1	
R242	ERDS2TJ391	390 OHM 1/4W ±5% Carbon	1	
R243	ERDS2TJ124	120k OHM 1/4W ±5% Carbon	1	
R244	ERDS2TJ222	2.2k OHM 1/4W ±5% Carbon	1	
R245	ERDS2TJ391	390 OHM 1/4W ±5% Carbon	1	
R246	ERDS2TJ124	120k OHM 1/4W ±5% Carbon	1	
R247	ERDS2TJ222	2.2k OHM 1/4W ±5% Carbon	1	
R248	ERDS2TJ331	330 OHM 1/4W ±5% Carbon	1	
R249	ERDS2TJ124	120k OHM 1/4W ±5% Carbon	1	
R250	ERDS2TJ222	2.2k OHM 1/4W ±5% Carbon	1	
R251	ERDS2TJ271	270 OHM 1/4W ±5% Carbon	1	
R252	ERDS2TJ124	120 OHM 1/4W ±5% Carbon	1	
R253	ERDS2TJ222	2.2k OHM 1/4W ±5% Carbon	1	
R261	ERDS2TJ680	68 OHM 1/4W ±5% Carbon	1	
R262	ERDS2TJ473	47k OHM 1/4W ±5% Carbon	1	
R300	ERDS2TJ473	47k OHM 1/4W ±5% Carbon	1	
R301	ERDS2TJ105	1M OHM 1/4W ±5% Carbon	1	
R302	ERDS2TJ561	560 OHM 1/4W ±5% Carbon	1	
R303	ERDS2TJ821	820 OHM 1/4W ±5% Carbon	1	
R304	ERDS2TJ273	27k OHM 1/4W ±5% Carbon	1	
R305	ERDS2TJ273	27k OHM 1/4W ±5% Carbon	1	
R306	ERDS2TJ392	3.9k OHM 1/4W ±5% Carbon	1	
R307	ERDS2TJ392	3.9k OHM 1/4W ±5% Carbon	1	
R308	ERDS2TJ222	2.2k OHM 1/4W ±5% Carbon	1	
R309	ERDS2TJ391	390 OHM 1/4W ±5% Carbon	1	
R310	ERDS2TJ104	100k OHM 1/4W ±5% Carbon	1	
R311	ERDS2TJ222	2.2k OHM 1/4W ±5% Carbon	1	
R312	ERDS2TJ391	390 OHM 1/4W ±5% Carbon	1	
R313	ERDS2TJ124	120k OHM 1/4W ±5% Carbon	1	
R314	ERDS2TJ222	2.2k OHM 1/4W ±5% Carbon	1	
R315	ERDS2TJ391	390 OHM 1/4W ±5% Carbon	1	
R316	ERDS2TJ124	120k OHM 1/4W ±5% Carbon	1	

Ref. No.	Part No.	Part Name & Description	Pcs Set	Remarks
R317	ERDS2TJ222	2.2k OHM 1/4W ±5% Carbon	1	
R318	ERDS2TJ331	330 OHM 1/4W ±5% Carbon	1	
R319	ERDS2TJ124	120k OHM 1/4W ±5% Carbon	1	
R320	ERDS2TJ222	2.2k OHM 1/4W ±5% Carbon	1	
R321	ERDS2TJ271	270 OHM 1/4W ±5% Carbon	1	
R322	ERDS2TJ124	120k OHM 1/4W ±5% Carbon	1	
R323	ERDS2TJ222	2.2k OHM 1/4W ±5% Carbon	1	
R331	ERDS2TJ680	68 OHM 1/4W ±5% Carbon	1	
R332	ERDS2TJ473	47k OHM 1/4W ±5% Carbon	1	
R333	ERDS2TJ821	820 OHM 1/4W ±5% Carbon	1	
R334	ERDS2TJ273	27k OHM 1/4W ±5% Carbon	1	
R335	ERDS2TJ273	27k OHM 1/4W ±5% Carbon	1	
R336	ERDS2TJ392	3.9k OHM 1/4W ±5% Carbon	1	
R337	ERDS2TJ392	3.9k OHM 1/4W ±5% Carbon	1	
R338	ERDS2TJ222	2.2k OHM 1/4W ±5% Carbon	1	
R339	ERDS2TJ391	390 OHM 1/4W ±5% Carbon	1	
R340	ERDS2TJ104	100k OHM 1/4W ±5% Carbon	1	
R341	ERDS2TJ222	2.2k OHM 1/4W ±5% Carbon	1	
R342	ERDS2TJ391	390 OHM 1/4W ±5% Carbon	1	
R343	ERDS2TJ124	120k OHM 1/4W ±5% Carbon	1	
R344	ERDS2TJ222	2.2k OHM 1/4W ±5% Carbon	1	
R345	ERDS2TJ391	390 OHM 1/4W ±5% Carbon	1	
R346	ERDS2TJ124	120k OHM 1/4W ±5% Carbon	1	
R347	ERDS2TJ222	2.2k OHM 1/4W ±5% Carbon	1	
R348	ERDS2TJ331	330 OHM 1/4W ±5% Carbon	1	
R349	ERDS2TJ124	120k OHM 1/4W ±5% Carbon	1	
R350	ERDS2TJ222	2.2k OHM 1/4W ±5% Carbon	1	
R351	ERDS2TJ271	270 OHM 1/4W ±5% Carbon	1	
R352	ERDS2TJ124	120k OHM 1/4W ±5% Carbon	1	
R353	ERDS2TJ222	2.2k OHM 1/4W ±5% Carbon	1	
R361	ERDS2TJ680	68 OHM 1/4W ±5% Carbon	1	
R362	ERDS2TJ473	47k OHM 1/4W ±5% Carbon	1	
R700	ERDS2EJ471	470 OHM 1/4W ±5% Carbon	1	
R701	ERDS2TJ270	27 OHM 1/4W ±5% Carbon	1	

Ref. No.	Part No.	Part Name & Description	Pcs Set	Remarks
R702	ERDS2TJ471	470 OHM 1/4W ±5% Carbon	1	
R703	ERDS2TJ331	330 OHM 1/4W ±5% Carbon	1	
R704	ERDS2TJ103	10k OHM 1/4W ±5% Carbon	1	
R705	ERDS2TJ103	10k OHM 1/4W ±5% Carbon	1	
R706	ERDS2TJ104	100k OHM 1/4W ±5% Carbon	1	
R707	ERDS2TJ104	100k OHM 1/4W ±5% Carbon	1	
R708	ERDS2TJ681	680 OHM 1/4W ±5% Carbon	1	
R709	ERDS2TJ104	100k OHM 1/4W ±5% Carbon	1	
R710	ERDS2TJ104	100k OHM 1/4W ±5% Carbon	1	
R711	ERDS2TJ681	680 OHM 1/4W ±5% Carbon	1	
R713	ERDS2TJ681	680 OHM 1/4W ±5% Carbon	1	
R715	ERG1ANJ180	18 OHM 1W ±5% Wire Wound	1	
R716	ERDS2TJ681	680 OHM 1/4W ±5% Carbon	1	
R718	ERDS2TJ681	680 OHM 1/4W ±5% Carbon	1	
R720	ERDS2TJ681	680 OHM 1/4W ±5% Carbon	1	

CAPACITORS

Ref. No.	Part No.	Part Name & Description	Pcs Set	Remarks
C200	ECEA1HS010	1 MFD 50WV Electrolytic	1	
C201	ECEA1HS4R7	4.7 MFD 50WV Electrolytic	1	
C202	ECEA1HS010	1 MFD 50WV Electrolytic	1	
C203	ECEA1HS010	1 MFD 50WV Electrolytic	1	
C204	ECEA1HS2R2	2.2 MFD 50WV Electrolytic	1	
C205	ECQV05104JZ	0.1 MFD 50WV ±5% Polyester	1	
C206	YECCD1H150KM	15 PF 50WV ±10% Ceramic	1	
C207	ECEA1HKR47	0.47 MFD 50WV Electrolytic	1	
C208	YECQX1H183K	0.018 MFD 50WV ±10% Polyester	1	
C209	YECCD1H150KM	15 PF 50WV ±10% Ceramic	1	
C210	ECQV05104JZ	0.1 MFD 50WV ±5% Polyester	1	
C211	YECQX1H222K	0.0022 MFD 50WV ±10% Polyester	1	
C212	YECCD1H150KM	15 PF 50WV ±10% Ceramic	1	
C213	YECQX1H473K	0.047 MFD 50WV ±10% Polyester	1	
C214	YECQX1H102K	0.001 MFD 50WV ±10% Polyester	1	
C215	YECCD1H150KM	15 PF 50WV ±10% Ceramic	1	
C216	YECQX1H223K	0.022 MFD 50WV ±10% Polyester	1	
C217	YECKD1H471KB	470 PF 50WV ±10% Ceramic	1	
C218	YECKC1H150KM	15 PF 50WV ±10% Ceramic	1	
C219	ECEA1HS4R7	4.7 MFD 50WV Electrolytic	1	
C220	YECCD1H101KM	100 PF 50WV ±10% Ceramic	1	
C223	YECQX1H222K	0.0022 MFD 50WV ±10% Polyester	1	
C224	ECEA1HS010	1 MFD 50WV Electrolytic	1	
C225	ECEA1HS101	100 MFD 50WV Electrolytic	1	
C226	ECEA1HS2R2	2.2 MFD 50WV Electrolytic	1	
C227	ECQV05104JZ	0.1 MFD 50WV ±5% Polyester	1	
C228	YECCD1H150KM	15 PF 50WV ±10% Ceramic	1	
C229	ECEA1HKR47	0.47 MFD 50WV Electrolytic	1	
C230	YECQX1H183K	0.018 MFD 50WV ±10% Polyester	1	
C231	YECCD1H150KM	15 PF 50WV ±10% Ceramic	1	
C232	ECQV05104JZ	0.1 MFD 50WV ±5% Polyester	1	
C233	YECQX1H222K	0.0022 MFD 50WV ±10% Polyester	1	

Ref. No.	Part No.	Part Name & Description	Pcs Set	Remarks
C234	YECCD1H150KM	15 PF 50WV ±10% Ceramic	1	
C235	YECQX1H473K	0.047 MFD 50WV ±10% Polyester	1	
C236	YECQX1H102K	0.001 MFD 50WV ±10% Polyester	1	
C237	YECCD1H150KM	15 PF 50WV ±10% Ceramic	1	
C238	YECQX1H223K	0.022 MFD 50WV ±10% Polyester	1	
C239	YECKD1H471KB	470 PF 50WV ±10% Ceramic	1	
C240	YECCD1H150KM	15 PF 50WV ±10% Ceramic	1	
C241	ECEA1HS4R7	4.7 MFD 50WV Electrolytic	1	
C242	YECCD1H101KM	100 PF 50WV ±10% Ceramic	1	
C245	YECQX1H222K	0.0022 MFD 50WV ±10% Polyester	1	
C300	ECEA1HS010	1 MFD 50WV Electrolytic	1	
C301	ECEA1HS4R7	4.7 MFD 50WV Electrolytic	1	
C302	ECEA1HS010	1 MFD 50WV Electrolytic	1	
C303	ECEA1HS010	1 MFD 50WV Electrolytic	1	
C304	ECEA1HS2R2	2.2 MFD 50WV Electrolytic	1	
C305	ECQV05104JZ	0.1 MFD 50WV ±5% Polyester	1	
C306	YECCD1H150KM	15 PF 50WV ±10% Ceramic	1	
C307	ECEA1HKR47	0.47 MFD 50WV Electrolytic	1	
C308	YECQX1H183K	0.018 MFD 50WV ±10% Polyester	1	
C309	YECCD1H150KM	15 PF 50WV ±10% Ceramic	1	
C310	ECQV05104JZ	0.1 MFD 50WV ±5% Polyester	1	
C311	YECQX1H222K	0.0022 MFD 50WV ±10% Polyester	1	
C312	YECCD1H150KM	15 PF 50WV ±10% Ceramic	1	
C313	YECQX1H473K	0.047 MFD 50WV ±10% Polyester	1	
C314	YECQX1H102K	0.001 MFD 50WV ±10% Polyester	1	
C315	YECCD1H150KM	15 PF 50WV ±10% Ceramic	1	
C316	YECQX1H223K	0.022 MFD 50WV ±10% Polyester	1	
C317	YECKD1H471KB	470 PF 50WV ±10% Ceramic	1	
C318	YECCD1H150KM	15 PF 50WV ±10% Ceramic	1	
C319	ECEA1HS4R7	4.7 MFD 50WV Electrolytic	1	
C320	YECCD1H101KM	100 PF 50WV ±10% Ceramic	1	
C323	YECQX1H222K	0.0022 MFD 50WV ±10% Polyester	1	
C324	ECEA1HS010	1 MFD 50WV Electrolytic	1	
C325	ECEA1HS010	1 MFD 50WV Electrolytic	1	

Ref. No.	Part No.	Part Name & Description	Pcs Set	Remarks
C326	ECEA1HS2R2	2.2 MFD 50WV Electrolytic	1	
C327	ECQV05104JZ	0.1 MFD 50WV ±5% Polyester	1	
C328	YECCD1H150KM	15 PF 50WV ±10% Ceramic	1	
C329	ECEA1HKR47	0.47 MFD 50WV Electrolytic	1	
C330	YECQX1H183K	0.018 MFD 50WV ±10% Polyester	1	
C331	YECCD1H150KM	15 PF 50WV ±10% Ceramic	1	
C332	ECQV05104JZ	0.1 MFD 50WV ±5% Polyester	1	
C333	YECQX1H222K	0.0022 MFD 50WV ±10% Polyester	1	
C334	YECCD1H150KM	15 PF 50WV ±10% Ceramic	1	
C335	YECQX1H473K	0.047 MFD 50WV ±10% Polyester	1	
C336	YECQX1H102K	0.001 MFD 50WV ±10% Polyester	1	
C337	YECCD1H150KM	15 PF 50WV ±10% Ceramic	1	
C338	YECQX1H223K	0.022 MFD 50WV ±10% Polyester	1	
C339	YECKD1H471KB	470 PF 50WV ±10% Ceramic	1	
C340	YECCD1H150KM	15 PF 50WV ±10% Ceramic	1	
C341	ECEA1HS4R7	4.7 MFD 50WV Electrolytic	1	
C342	YECCD1H101KM	100 PF 50WV ±10% Ceramic	1	
C345	YECQX1H222K	0.0022 MFD 50WV ±10% Polyester	1	
C700	ECEA1CV102WX	1000 MFD 16WV Electrolytic	1	
C701	ECEA1CV102WX	1000 MFD 16WV Electrolytic	1	
C702	ECEA1AS471	470 MFD 10WV Electrolytic	1	
C703	ECEA1AS471	470 MFD 10WV Electrolytic	1	
C704	ECEA1CS100	10 MFD 16WV Electrolytic	1	
C705	ECEA1CS101	100 MFD 16WV Electrolytic	1	
CS701	ECQV05104JZ	0.1 MFD 50WV ±5% Polyester	1	
CS702	ECQV05104JZ	0.1 MFD 50WV ±5% Polyester	1	
CS703	YECCD12204M	0.2 MFD 12WV ±20% Ceramic	1	
CS704	ECQV05104JZ	0.1 MFD 50WV ±5% Polyester	1	
CS705	YECCD12204M	0.2 MFD 12WV ±20% Ceramic	1	
CS706	YECCD12204M	0.2 MFD 12WV ±20% Ceramic	1	
CS707	YECQX1H473K	0.047 MFD 50WV ±10% Polyester	1	

Ref. No.	Part No.	Part Name & Description	Pcs Set	Remarks
VARIABLE RESISTORS				
VR1	EVUU5A215G15	100k OHM (G) Fader Control	1	
VR2, 3, 4, 5	EVBJMKP16B24	20k OHM (B) Frequency Control	10	
6, 7, 8, 9				
10, 11				
SWITCHES				
SW1, 2	YEAS09168	Equalizer, Front/Rear Selector Switch	2	
COIL				
CH700	YETQ021F037	Choke Coil	1	

Ref. No.	Part No.	Part Name & Description	Pcs Set	Remarks
ACCESSORIES				
A1	YEFG02315	Moutning Bracket	1	
A2	YEFG04010A	Supporting Strap	1	
A3	YEP9BS755A	Mounting Screw Kit	1	
A3-1	YEJV12071	Screw w/Washer	(5)	
A3-2	YEJV12066	Screw w/Washer	(3)	
A3-3	YEJN99024	Nut	(3)	
A3-4	YEJW02019FX	Flat Washer	(1)	
PRINTING				
A10	YEFM28550	Instruction Book	1	

E243 Printed in Japan
1983. 6.